11.3 Polar Graphs Day 1 Name: Key

Match the polar equation with the graphs labeled I-VI.

1. $r = 3\cos\theta$ circle on x-axis
   VI
2. $r = 3$ circle @ pole
   III
3. $r = 2 + 2\sin\theta$ a=b, cardioid on y-axis
   II
4. $r = 1 + 2\cos\theta$ a<b, limaçon on x-axis w/ loop
   IV
5. $r = \sin 3\theta$ rose, 3 leaves (n odd)
   I
6. $r = \sin 4\theta$ rose, 8 leaves (n even)
   V

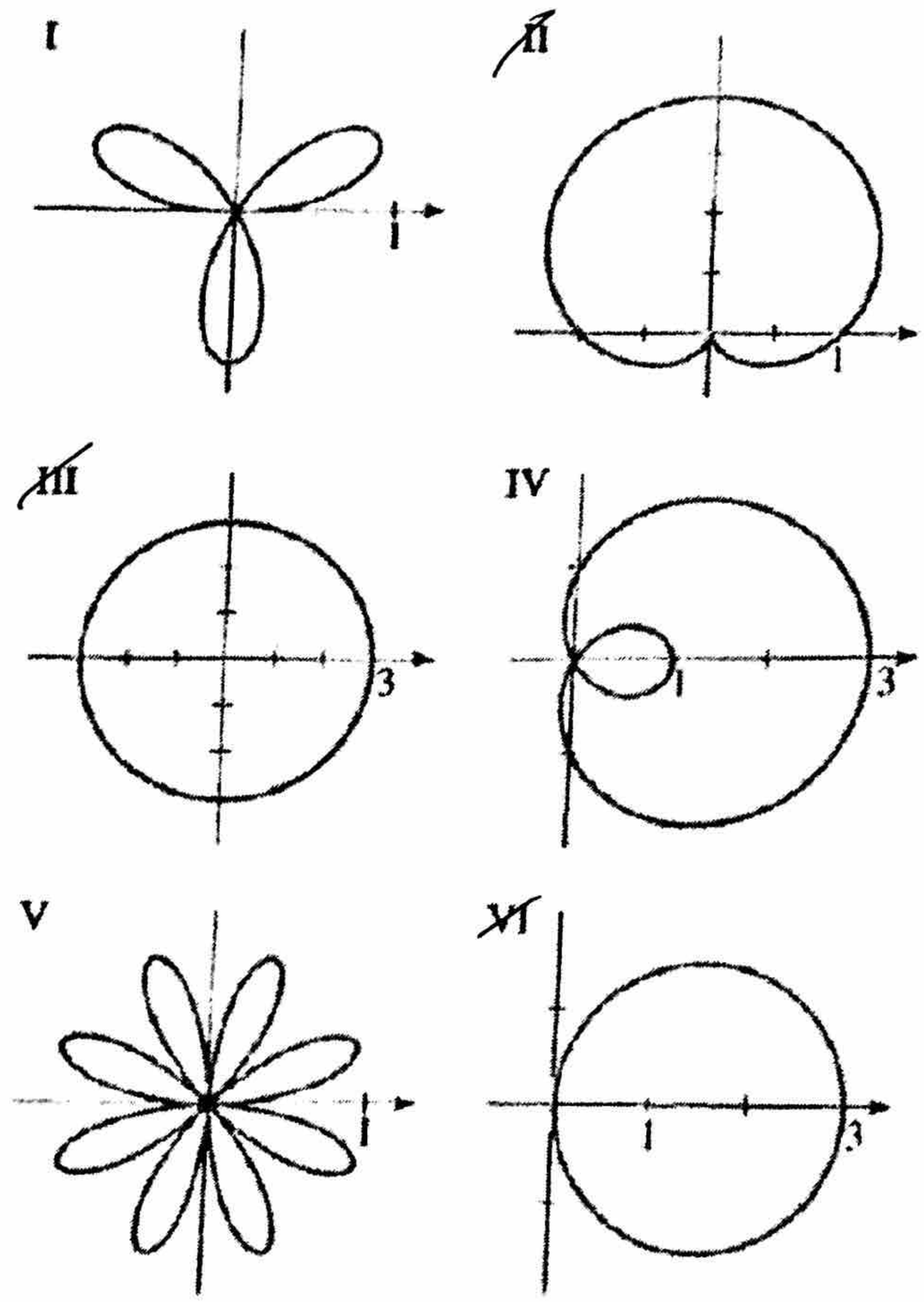

Sketch the graph of the polar equation. There are polar grids on the back if you would like to make your sketches more precise.

7. $r = 2$
   circle

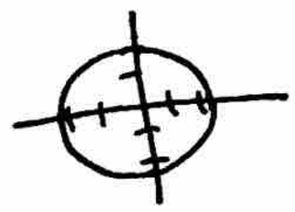

8. $\theta = \frac{5\pi}{6}$
   line

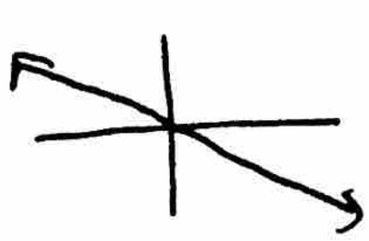

9. $r = 6\sin\theta$
   circle on y-axis

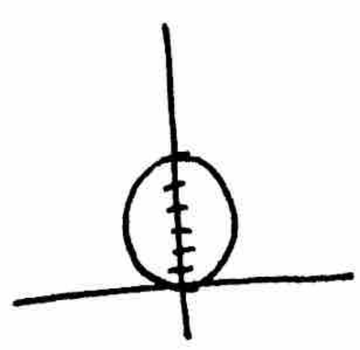

10. $r = -2\cos\theta$
    circle on x-axis reflected

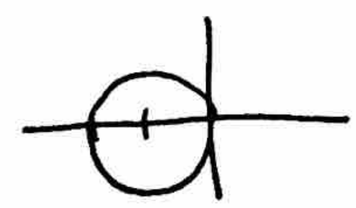

11. $r = 2 - 2\cos\theta$
    a=b
    cardioid on x-axis reflected

r	θ
0	0
2	π/2
4	π
2	3π/2

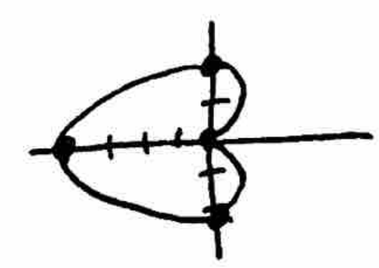

12. $r = 1 + \sin\theta$
    a=b
    cardioid on y-axis

r	θ
1	0
2	π/2
1	π
0	3π/2

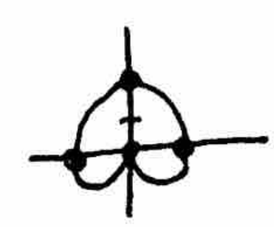

13. $r = \sin 2\theta$
    rose
    symmetric over y-axis
    n is even → 4 petals
    petal is length 1

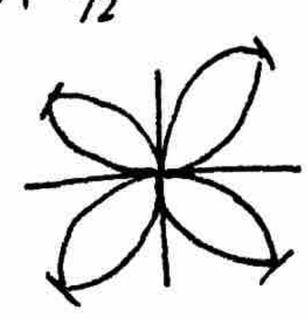

(d) $r = 3 + 2\cos\theta$ $a > b$

Type: dimpled limaçon on x-axis

r	θ
5	0
3	$\pi/2$
1	π
3	$3\pi/2$

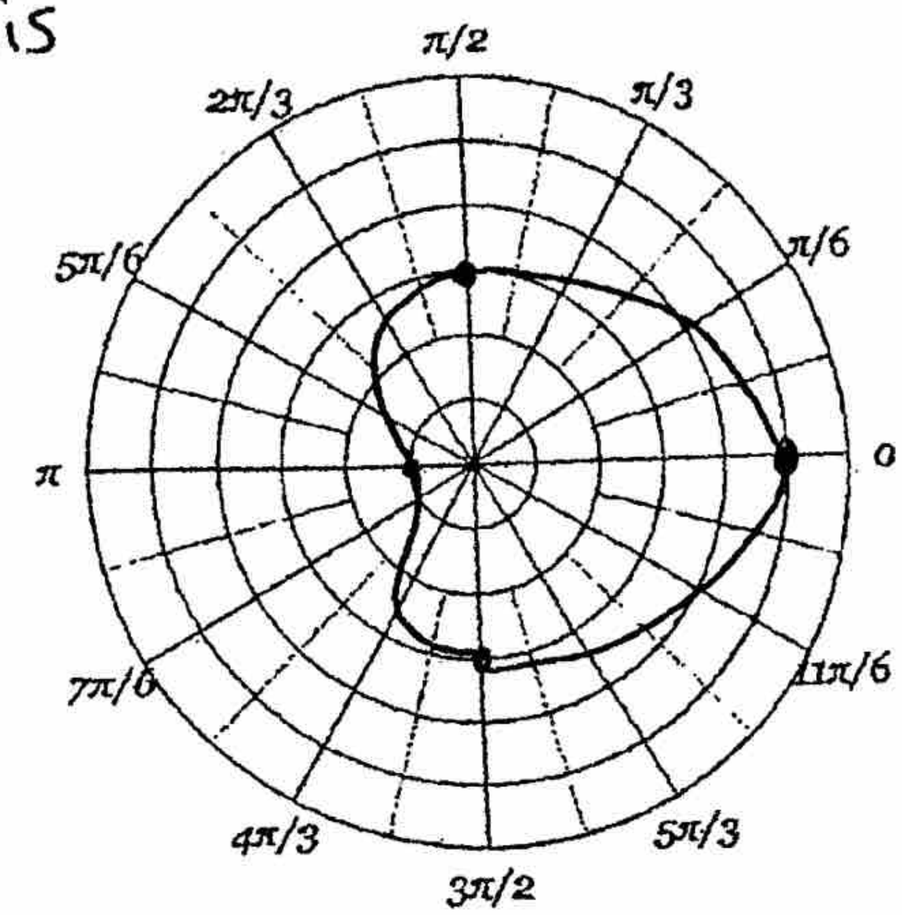

(e) $r = 1 + 2\sin\theta$ $a < b$

Type: limaçon w/loop on y-axis

r	θ
1	0
3	$\pi/2$
1	π
-1	$3\pi/2$

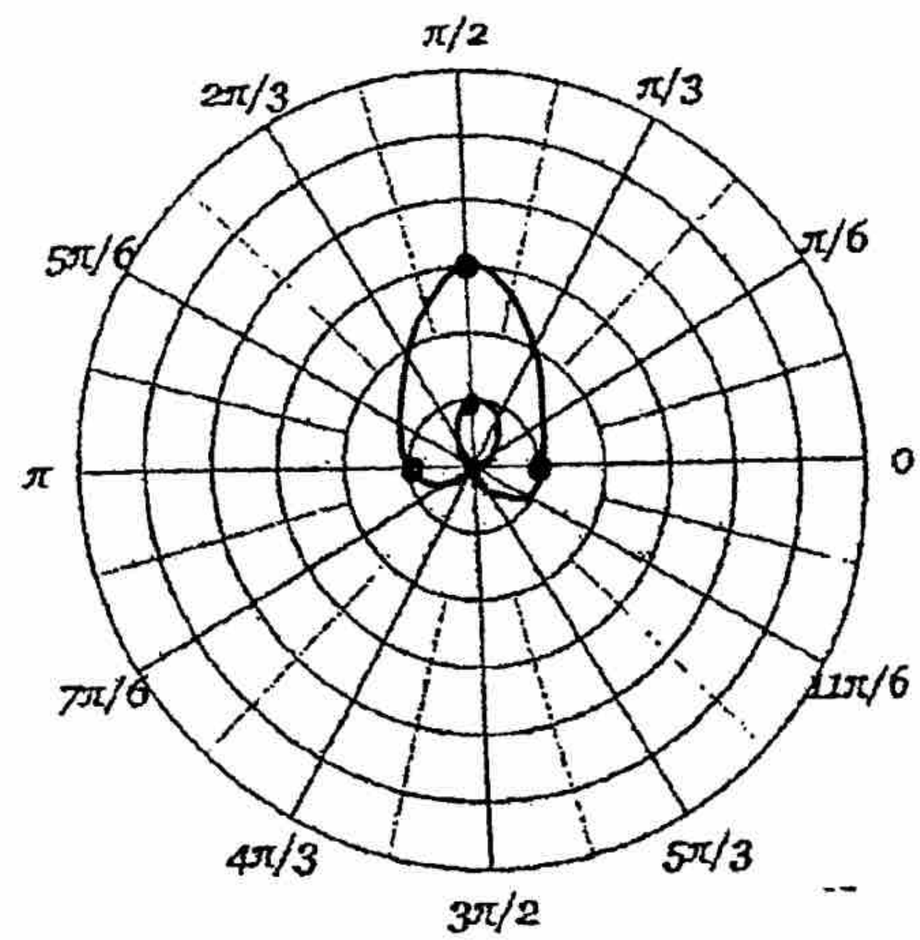

Notice that example (e) has an inner loop. I did.

At what value of θ does the loop begin? $7\pi/6$

where $r=0$

$0 = 1 + 2\sin\theta$

$-\frac{1}{2} = \sin\theta$

$\theta = 7\pi/6$ or $11\pi/6$

At what value of θ does the loop end? $11\pi/6$

where $r=0$ again

What do you notice about the values of r for the points that are on the loop?

r is negative

n is even

(f) $r = 4\cos(2\theta)$

Type: rose on x-axis

4 petals

r	2θ	θ
4	0	0
0	$\pi/2$	$\pi/4$
-4	π	$\pi/2$ ←
0	$3\pi/2$	$3\pi/4$
4	2π	π
-4	3π	$3\pi/2$

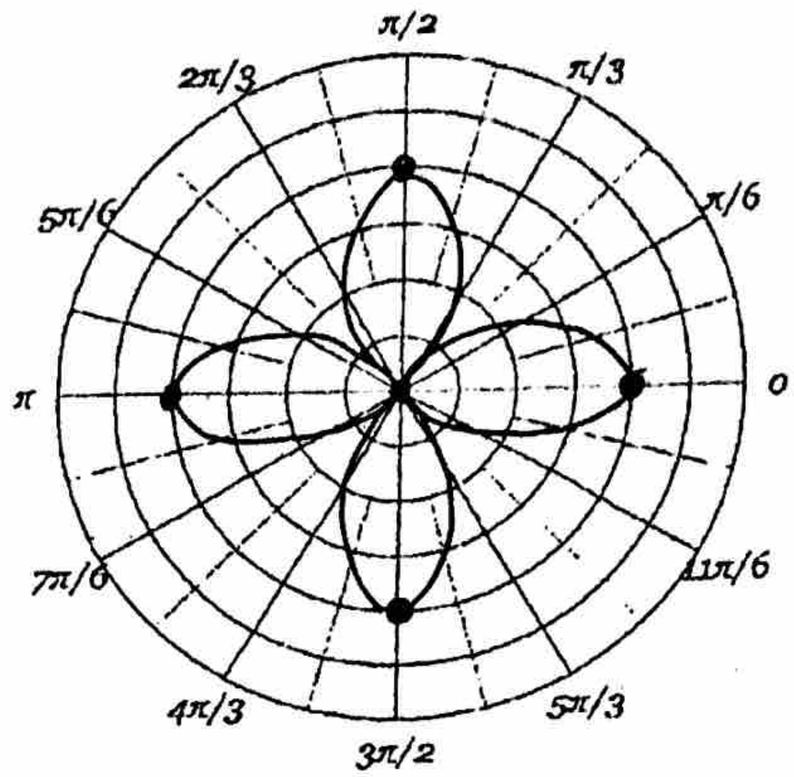

$0 = 4\cos 2\theta$ Name the values of θ where the petals begin and end. $\pi/4 + \pi/2\, n$

What is the maximum value of r on your graph? 4

Name the values of θ that give a maximum value for r. $\pi/2\, n$

$4 = 4\cos 2\theta$

(g) $r = 6\sin(3\theta)$

Type: rose w/ 3 petals

r	3θ	θ
0	0	0
6	$\pi/2$	$\pi/6$ ←
0	π	$\pi/3$
-6	$3\pi/2$	$\pi/2$
0	2π	$2\pi/3$

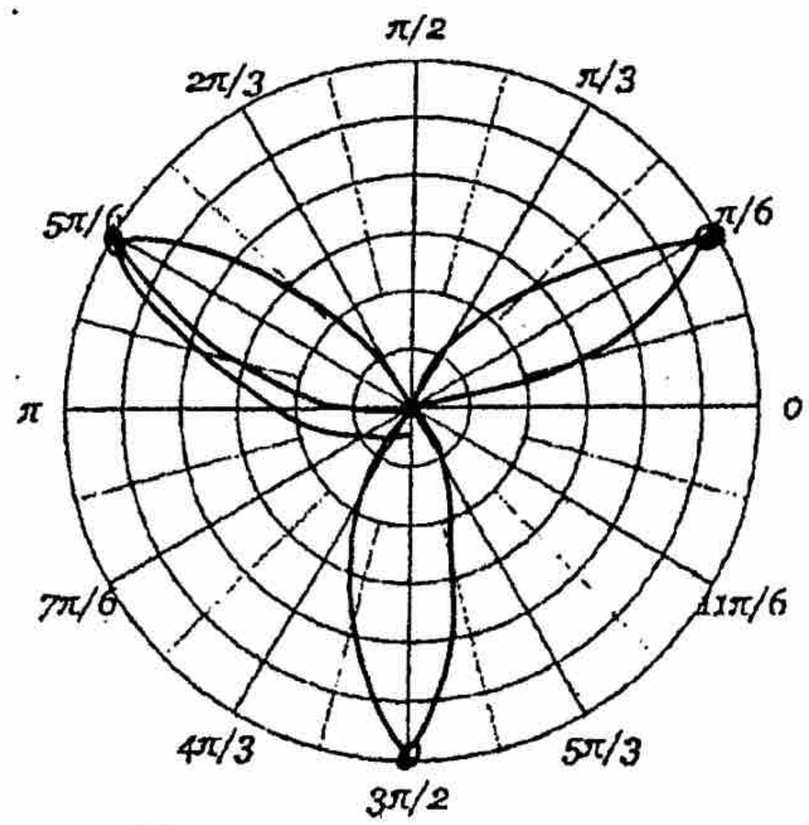

$0 = 6\sin 3\theta$ Name the values of θ where the petals begin and end. $\frac{\pi}{3} n$

What is the maximum value of r on your graph? 6

Name the values of θ that give a maximum value for r. $\frac{\pi}{6} + \frac{\pi}{3} n$

$6 = 6\sin 3\theta$