11.4 Polar Graphs Day 2

Ex. Make a table, tell what type of graph it is, and sketch the graph.

(a) $r = 3\cos\theta$

Type: circle on x-axis

r	θ
3	0
0	π/2
-3	π
0	3π/2

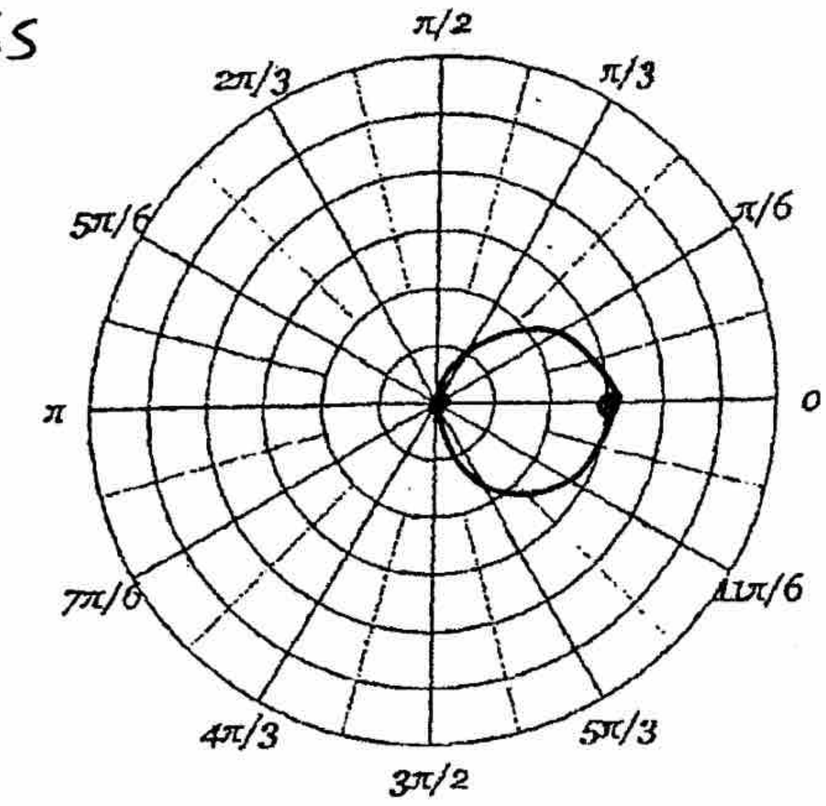

(b) $r = -2\sin\theta$

Type: circle on y-axis reflected

r	θ
0	0
-2	π/2
0	π
2	3π/2

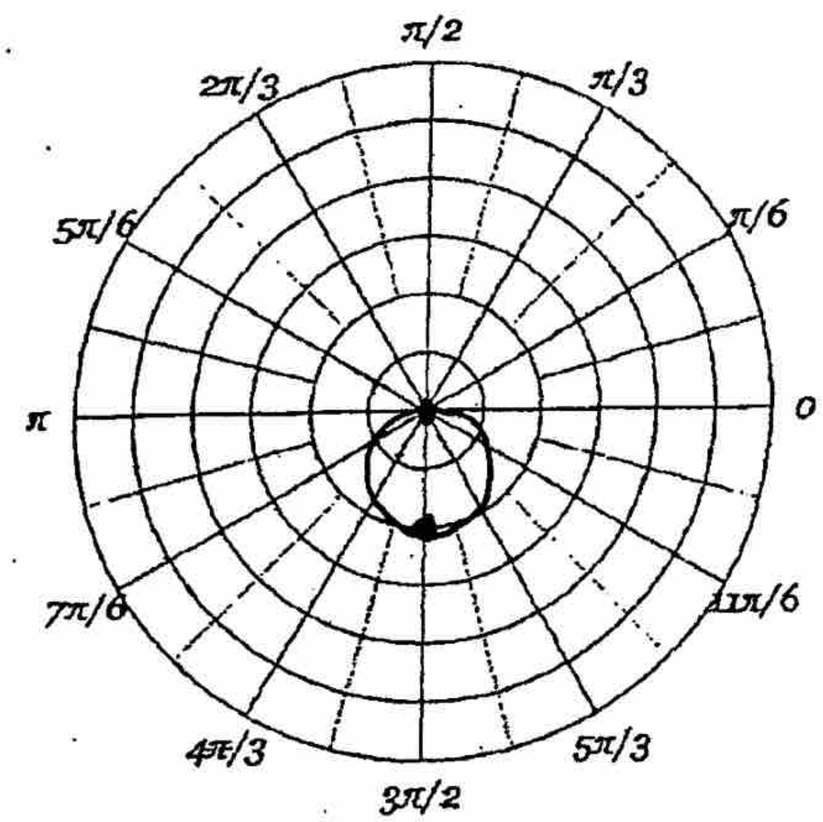

(c) $r = 2 + 2\sin\theta$ a=b

Type: cardioid on y-axis

r	θ
2	0
4	π/2
2	π
0	3π/2

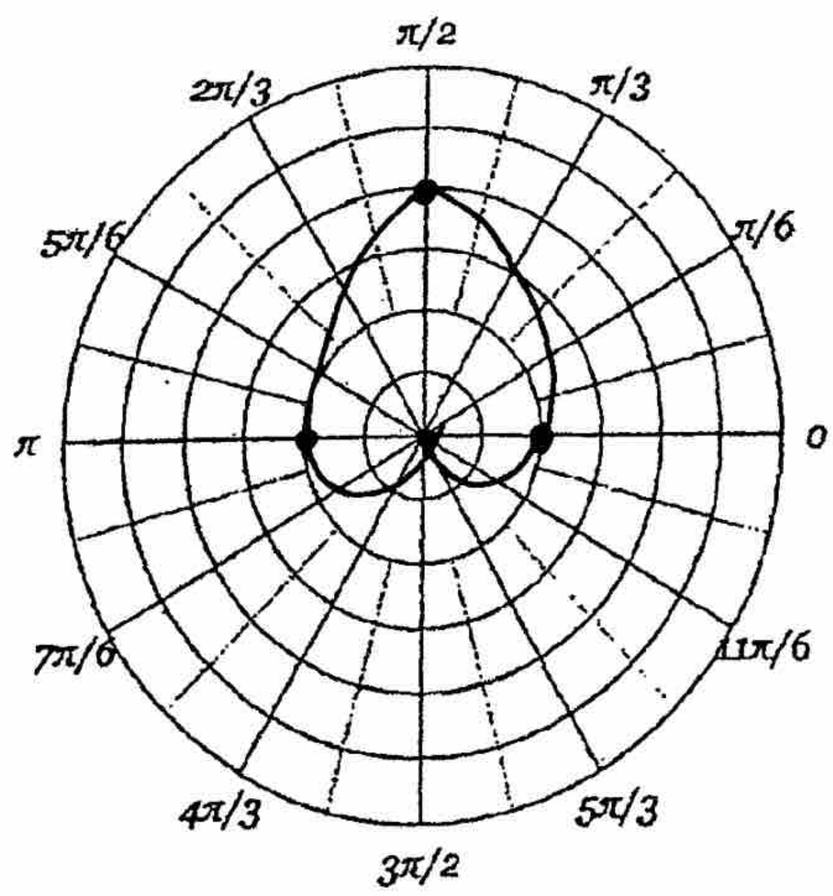

(d) $r = 3 + 2\cos\theta$ $a > b$

Type: dimpled limaçon on x-axis

r	θ
5	0
3	$\pi/2$
1	π
3	$3\pi/2$

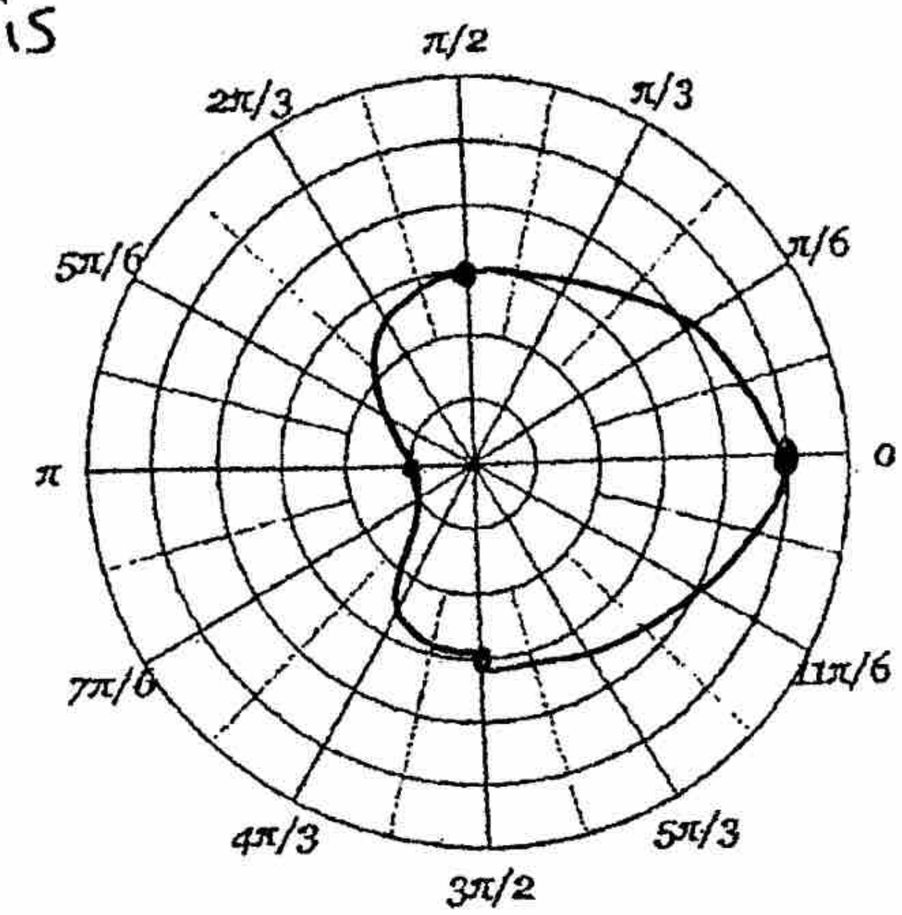

(e) $r = 1 + 2\sin\theta$ $a < b$

Type: limaçon w/loop on y-axis

r	θ
1	0
3	$\pi/2$
1	π
-1	$3\pi/2$

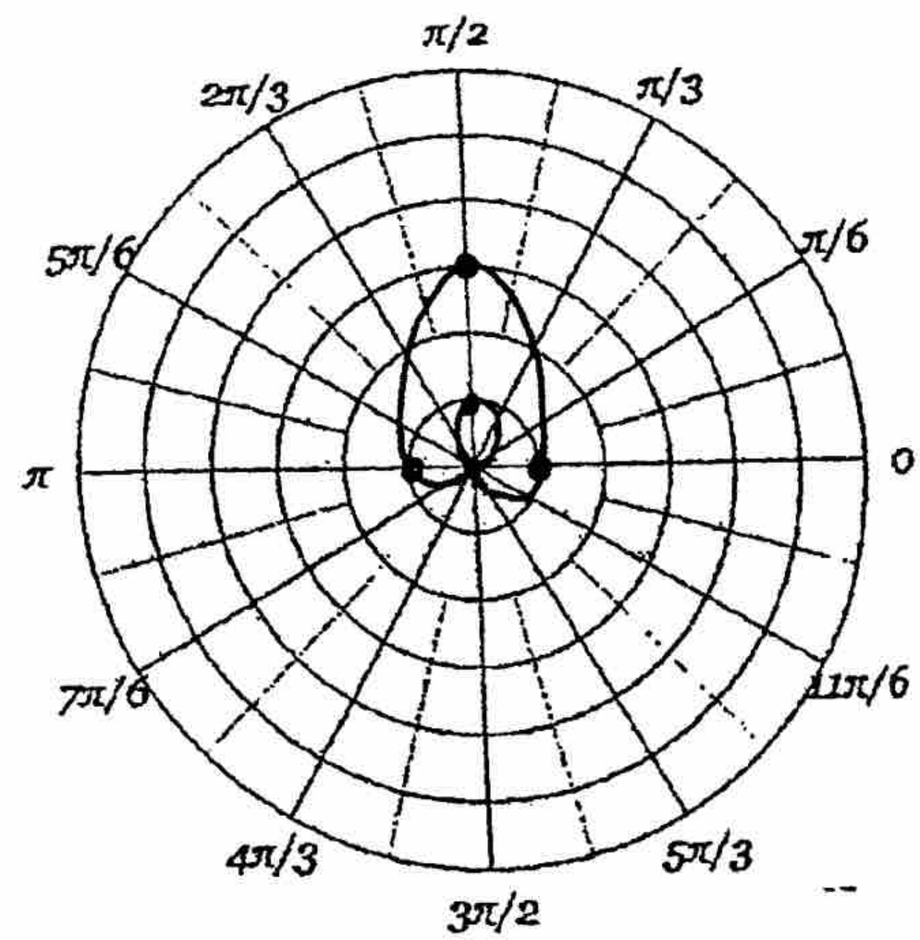

Notice that example (e) has an inner loop. I did.

At what value of θ does the loop begin? $7\pi/6$

where $r=0$

$0 = 1 + 2\sin\theta$

$-\frac{1}{2} = \sin\theta$

$\theta = 7\pi/6$ or $11\pi/6$

At what value of θ does the loop end? $11\pi/6$

where $r=0$ again

What do you notice about the values of r for the points that are on the loop?

r is negative

n is even

(f) $r = 4\cos(2\theta)$

Type: rose on x-axis

4 petals

r	2θ	θ
4	0	0
0	$\pi/2$	$\pi/4$
-4	π	$\pi/2$ ←
0	$3\pi/2$	$3\pi/4$
4	2π	π
-4	3π	$3\pi/2$

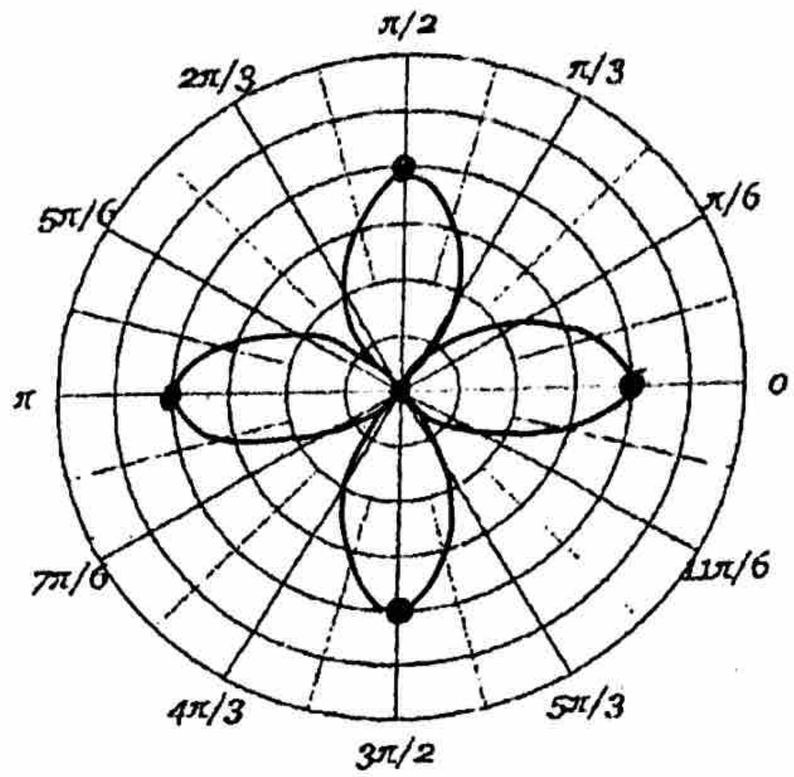

$0 = 4\cos 2\theta$ Name the values of θ where the petals begin and end. $\pi/4 + \pi/2\, n$

What is the maximum value of r on your graph? 4

Name the values of θ that give a maximum value for r. $\pi/2\, n$

$4 = 4\cos 2\theta$

(g) $r = 6\sin(3\theta)$

Type: rose w/ 3 petals

r	3θ	θ
0	0	0
6	$\pi/2$	$\pi/6$ ←
0	π	$\pi/3$
-6	$3\pi/2$	$\pi/2$
0	2π	$2\pi/3$

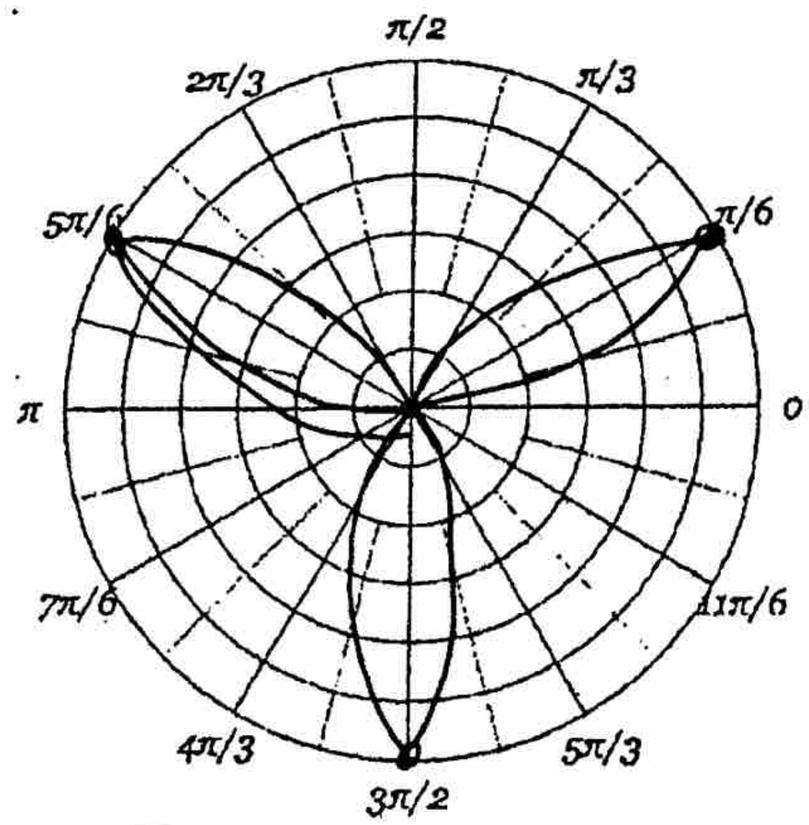

$0 = 6\sin 3\theta$ Name the values of θ where the petals begin and end. $\frac{\pi}{3} n$

What is the maximum value of r on your graph? 6

Name the values of θ that give a maximum value for r. $\frac{\pi}{6} + \frac{\pi}{3} n$

$6 = 6\sin 3\theta$